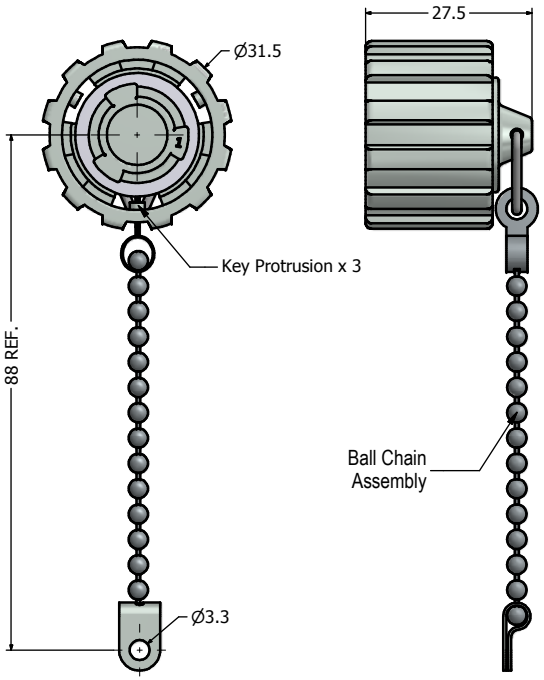

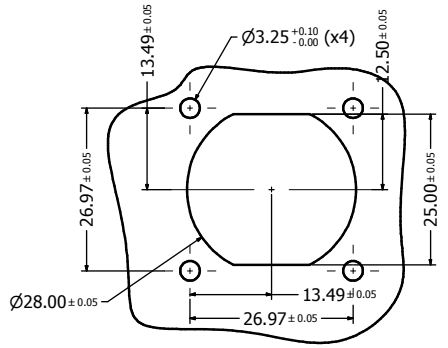

Recommended Double-D Panel Cutout

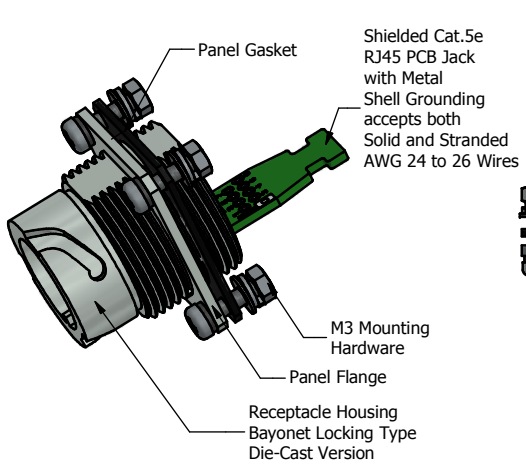

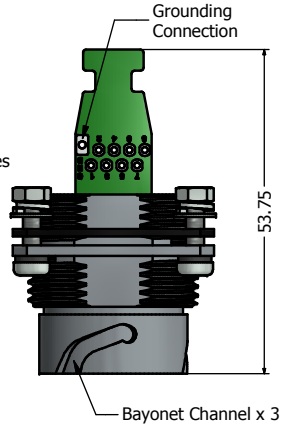

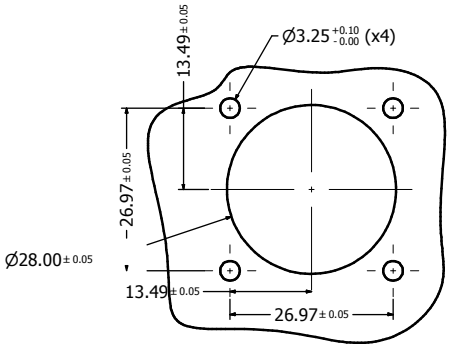

Recommanded Round Panel Cutout

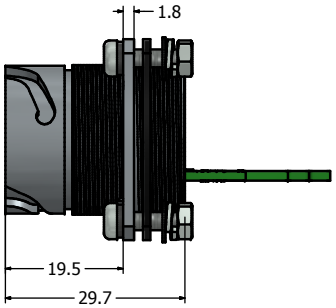

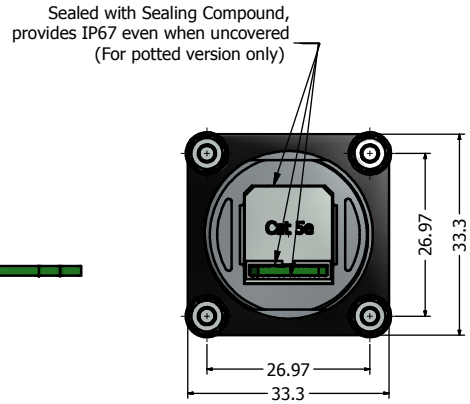

Notes:

1. Electrical Specifications:
   - Meets EIA/TIA-568-B.2 Cat.5e Specification
   - Contact Resistance: 20 mOhm max.
   - Insulation Resistance: 500MOhm min. @ 100 VDC
   - Current Rating: 1.2A max. at 25°C
   - Working Voltage: 100 VDC
   - DWV: 1000 VDC/60s Contact to Contact, 1500 VDC/60s Contact to Metal Shell
   - Operating Temperature: -40°C to +85°C
2. Material and Finish:
   - Receptacle Housing (with Flange) & Cover: Zinc Die-Cast, Finish: Nickel Plated
   - Cover Gasket: Silcon, Color: White
   - Ball Chain Assembly, Copper Alloy and Stainless steel, Nickel Plated
   - RJ45 Jack Metal Shell: Copper Alloy, Nickel Plated
   - RJ45 Jack Plastic Housing: Glass filled PBT UL94 V-0, Color: Black
   - RJ45 Jack Contacts: Phosphor Bronze, Finish: 50u" Gold min. over Nickel
   - PCB: FR-4
   - Panel Gasket: NBR, Color: Black
   - M3 Mounting Hardware: Stainless Steel
     Includes 4 x (Screw + Nut + Flat Washer + Spring Lock Washer)
3. Connector can be front or rear mounted to a maximum panel thickness of 3.2mm.
4. IP67 rated when covered or fully mated with the appropriate mating connector
5. Hardware shipped unassembled
6. (b) Recommended M3 screw mounting torque: 8 to 10 lb-inch
7. Supplied with a cable tie

Directive 2002/95/EC RoHS Compliant

Description	Part Number
Nickel Plated Zinc Die-Cast with Cat5e RJ45 PCB Jack + Grounding Hole + a cable tie + Cover	17-111234
Potted Nickel Plated Zinc Die-Cast with Cat5e RJ45 PCB Jack + Grounding Hole + a cable tie + Cover	17-111244

THIS DRAWING MAY NOT BE COPIED OR REPRODUCED IN ANY WAY, NOR MAY IT BE DISCLOSED TO A THIRD PARTY WITHOUT WRITTEN PERMISSION. OWNERSHIP AND COPYRIGHT OF CONEC CORPORATION.

DO NOT ALTER CAD DRAWING BY HAND

Customer:

Name	Title	Approval Date

Rev.	Changes	Date	Name
b	1 x b	Mar/07/2013	Vincent Ke
a	original		

Tolerance
Unless otherwise specified
0 PLC ± 0.30
1 PLC ± 0.20
2 PLC ± 0.10
3 PLC ± 0.05
ANGLES ± 1°

Autodesk Inventor

	Date	Name
2012		
Draw.	Nov. 22	Vincent Ke
Appd.	Nov. 22	J. Chaudry
Norm		
D-old		

CONEC®

Scale: Dim. in mm

Material: See Notes

Cat. 5e RJ45 PCB Jack Version-III
Receptacle (with Flange) + Cover Kit
Nickel Plated Zinc Die-Cast Version

Drawing No.: 17K1A387

DIN A3

Part No.: SEE PART NUMBER TABLE

Sheet 1/1